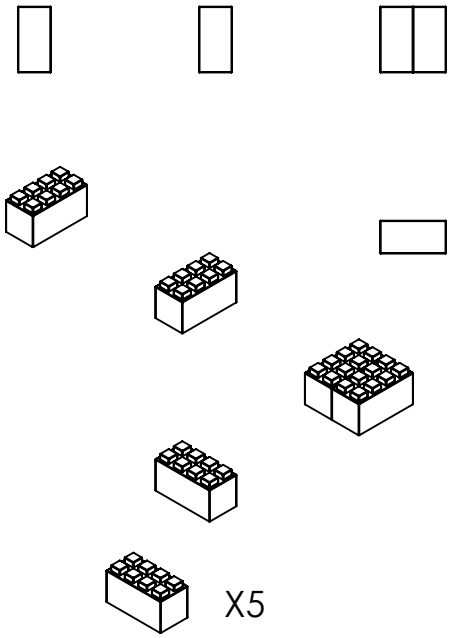

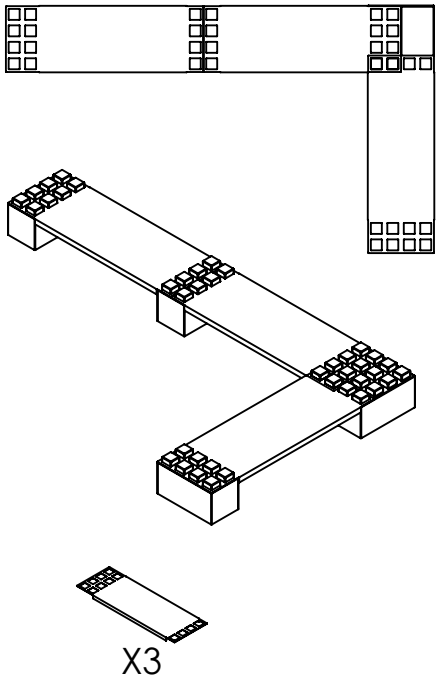

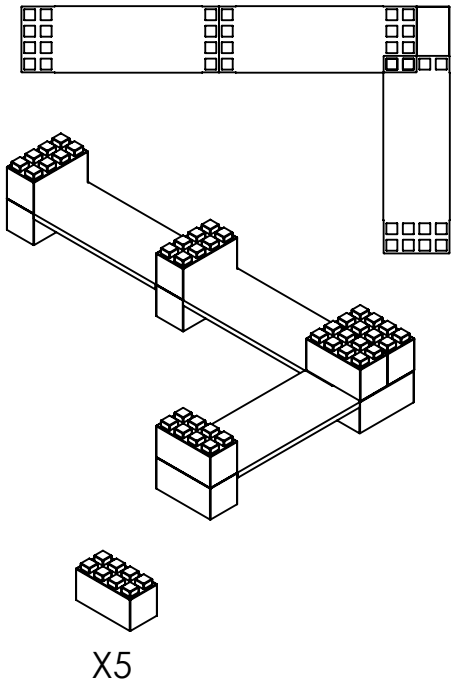

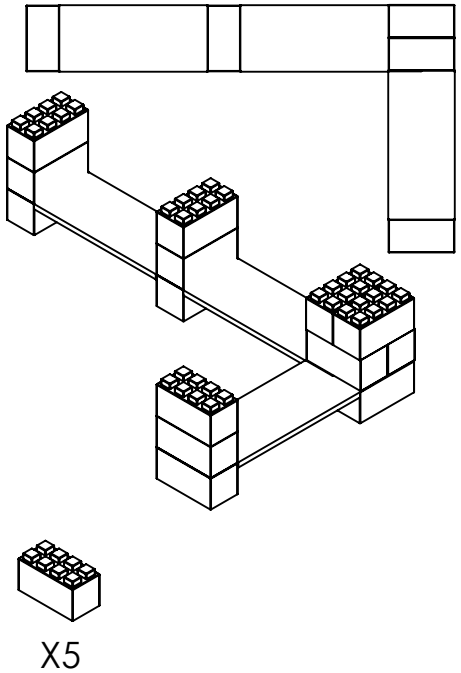
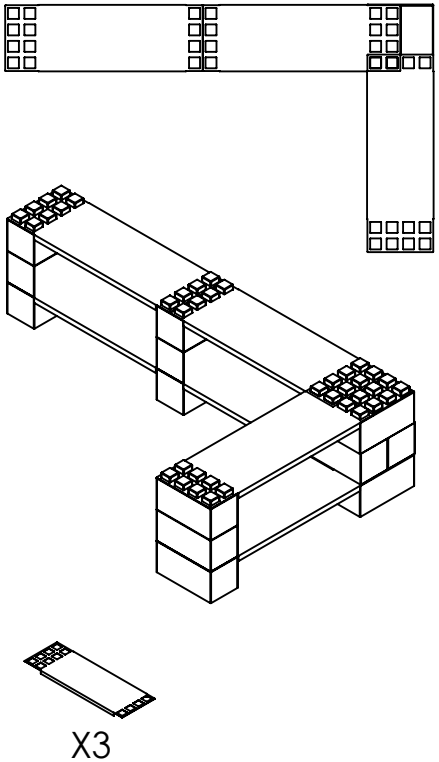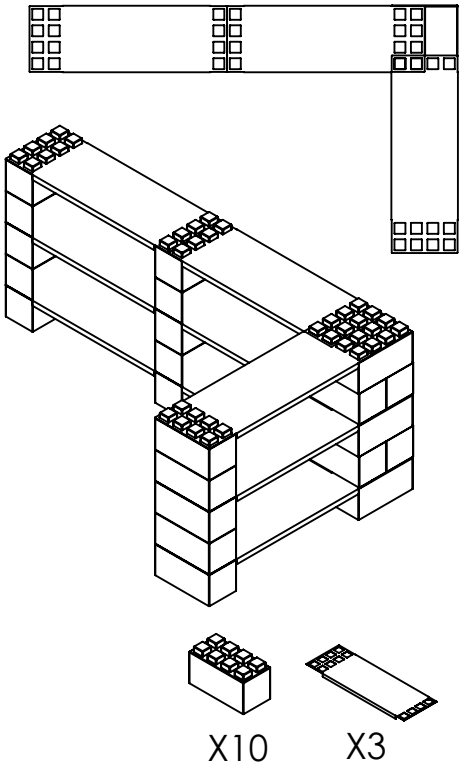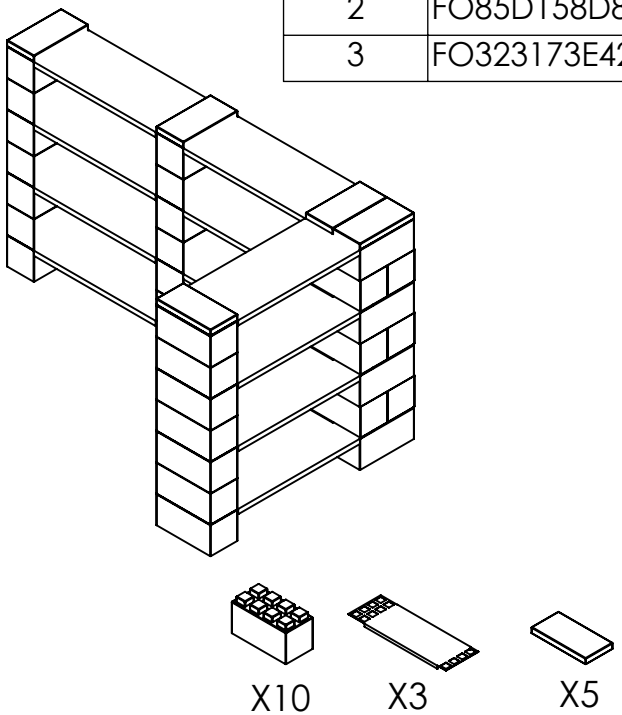
ITEM NO.	PART NUMBER	DESCRIPTION	QTY.
1	FO230FDF6207-2x4	Full Block	35
2	FO85D158D815-Shelf	Half Shelf Unit 36"	12
3	FO323173E423-2x4 cap	Cap Block 6x12"	5