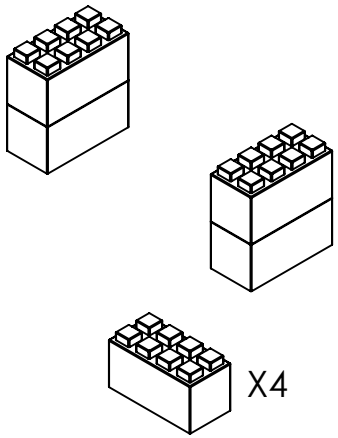
X4

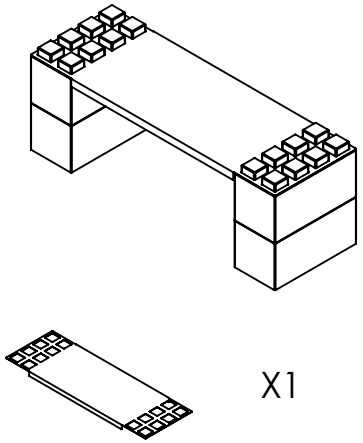
X1

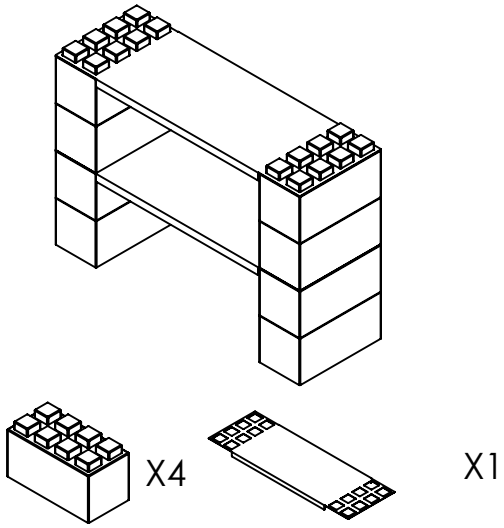
X4
X1

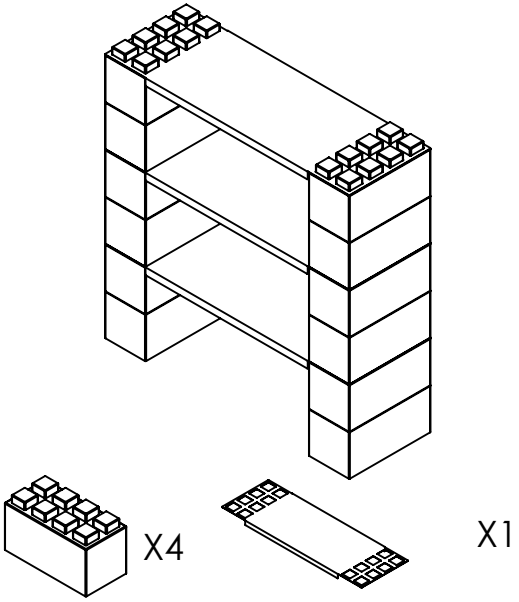
X4
X1

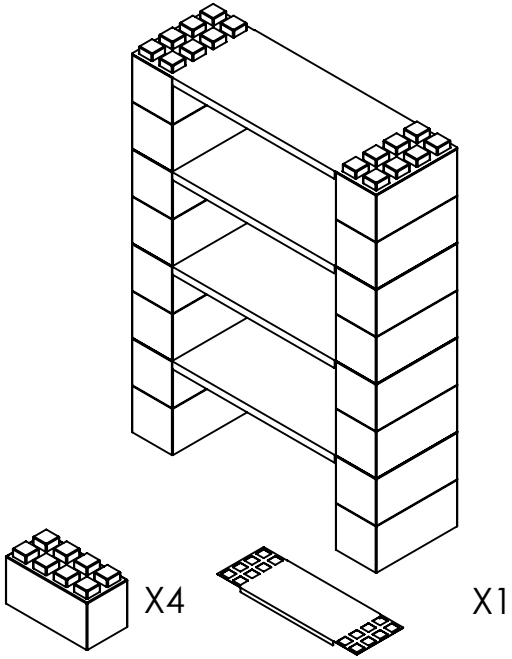
X4
X1

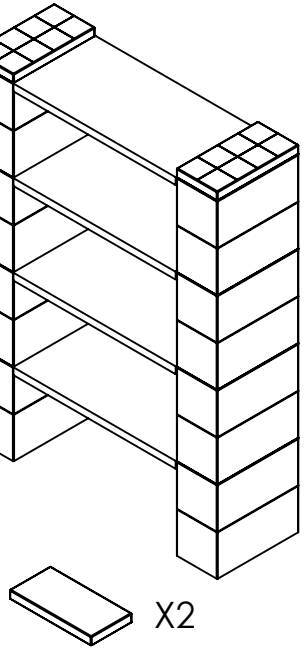
X2