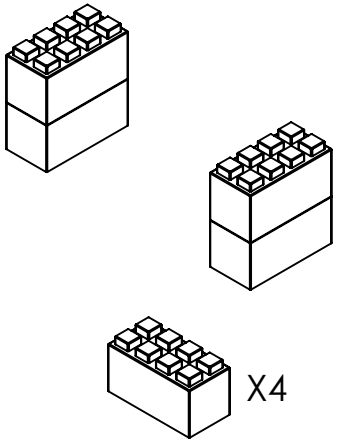
X4

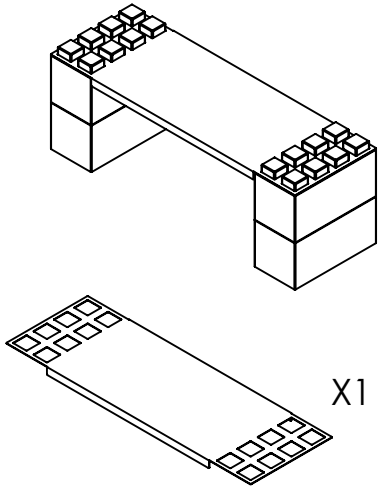
X1

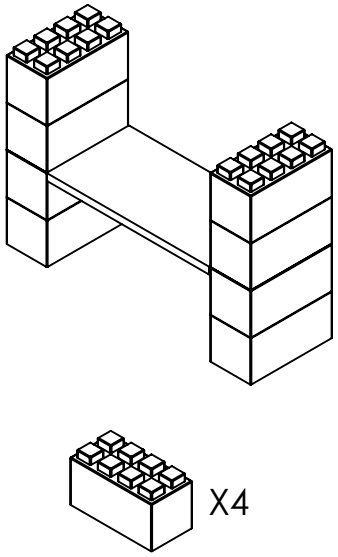
X4

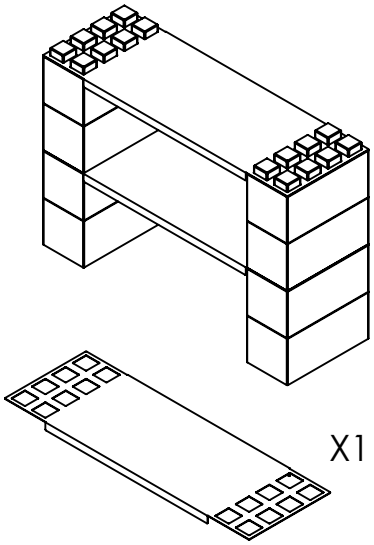
X1

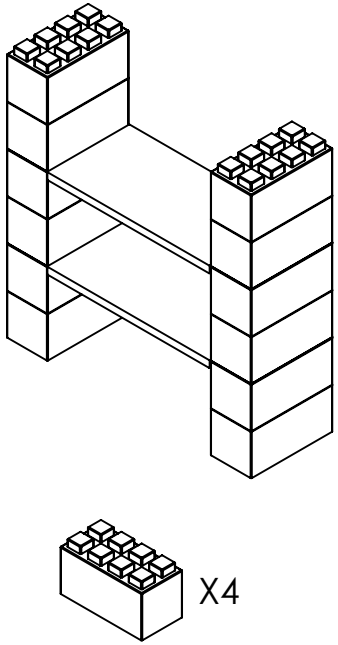
X4

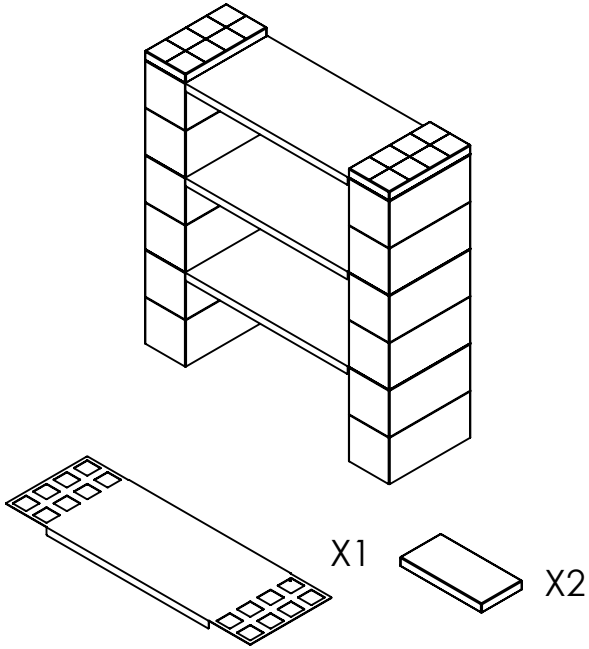
X1
X2