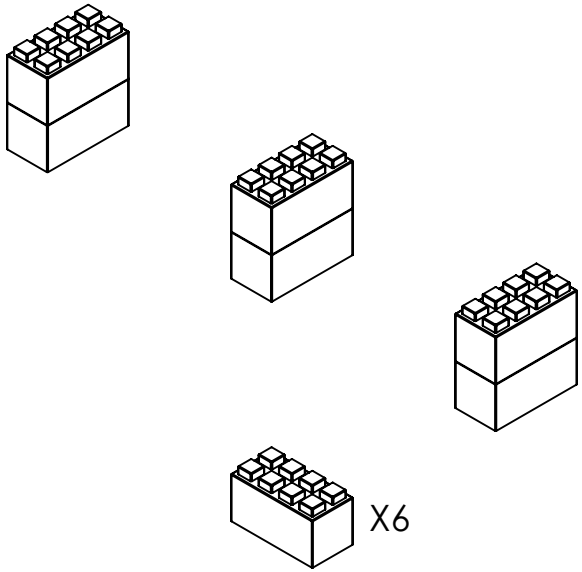
X6

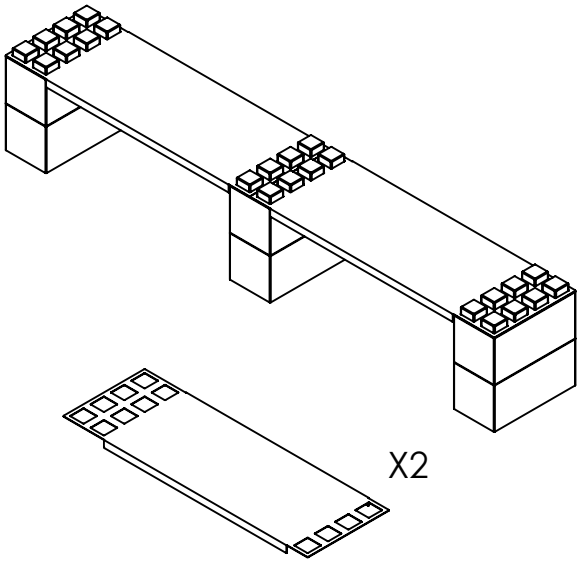
X2

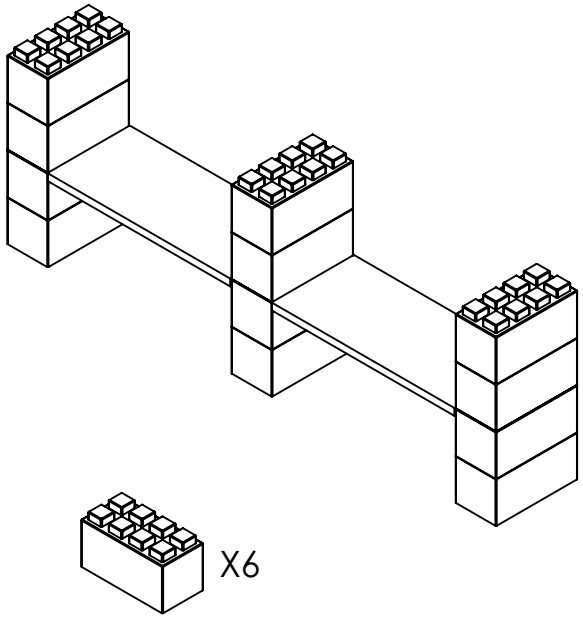
X6

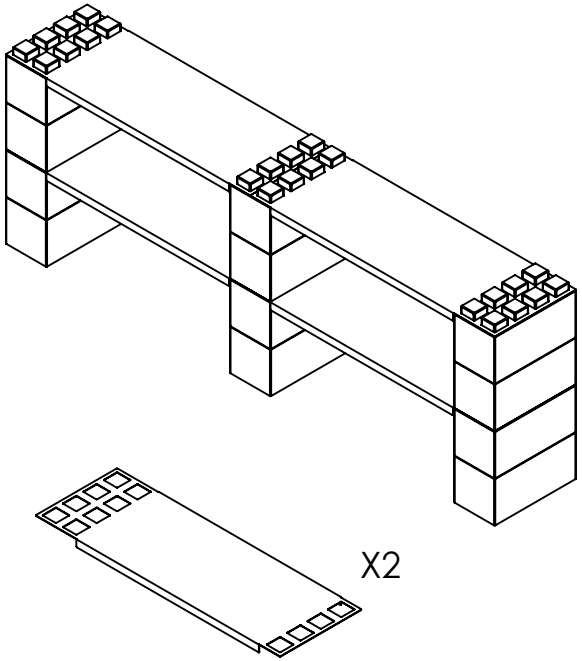
X2

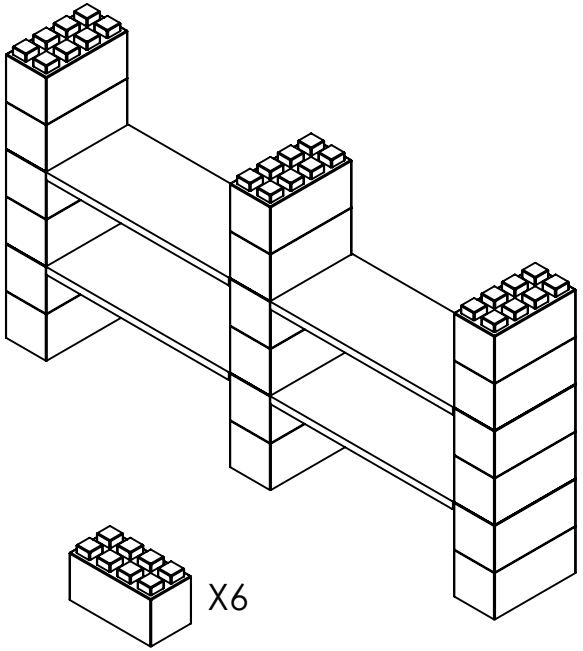
X6

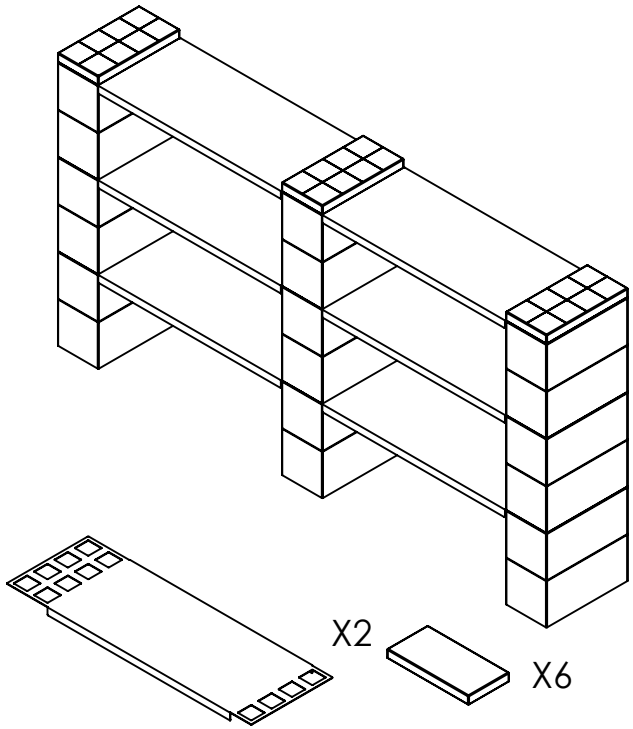
X2
X6